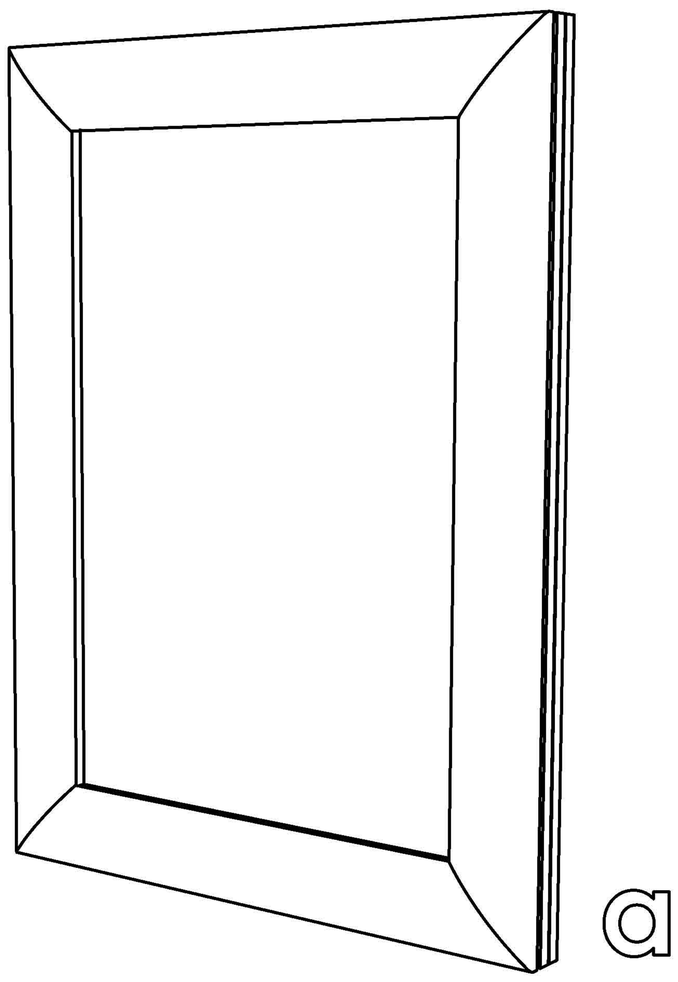
a

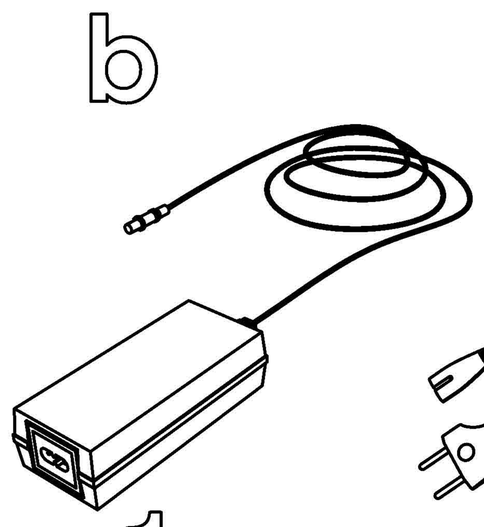
b
x1

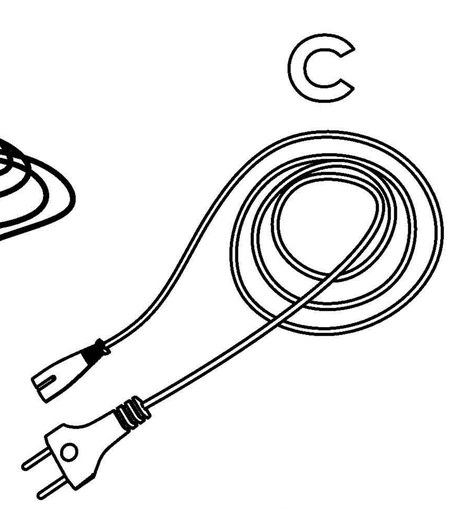
c
x1

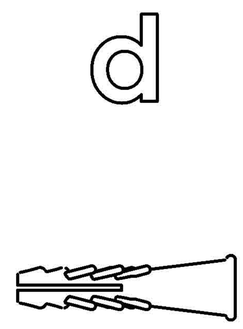
d
x4

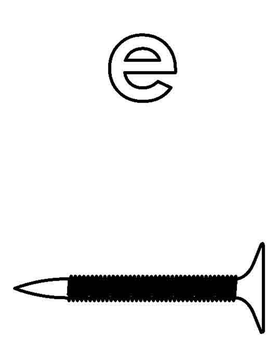
e
x4

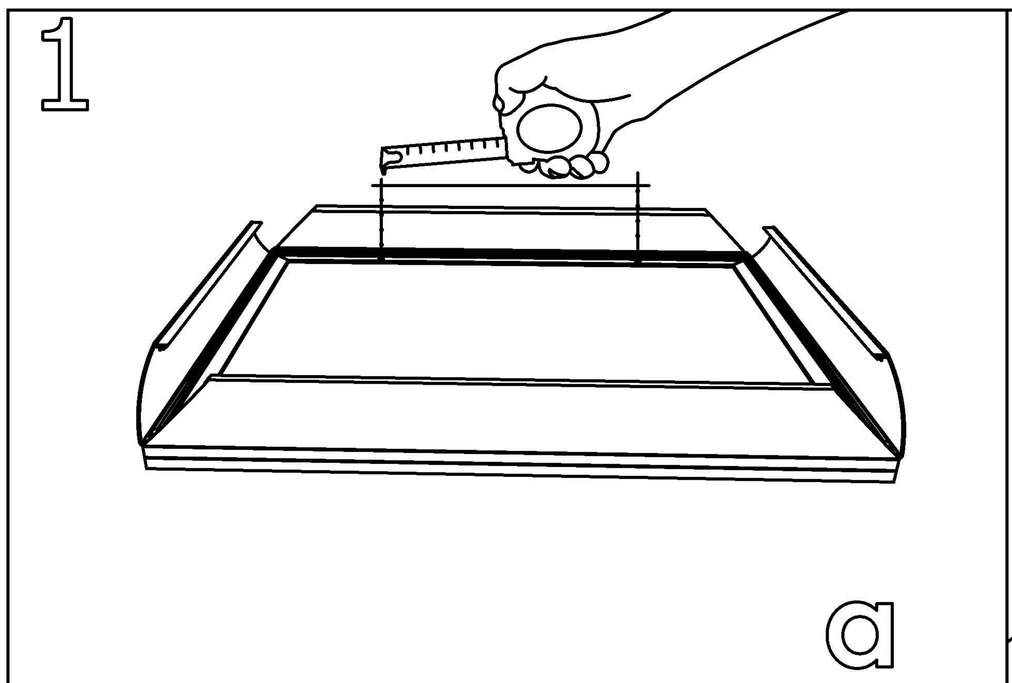
1
a

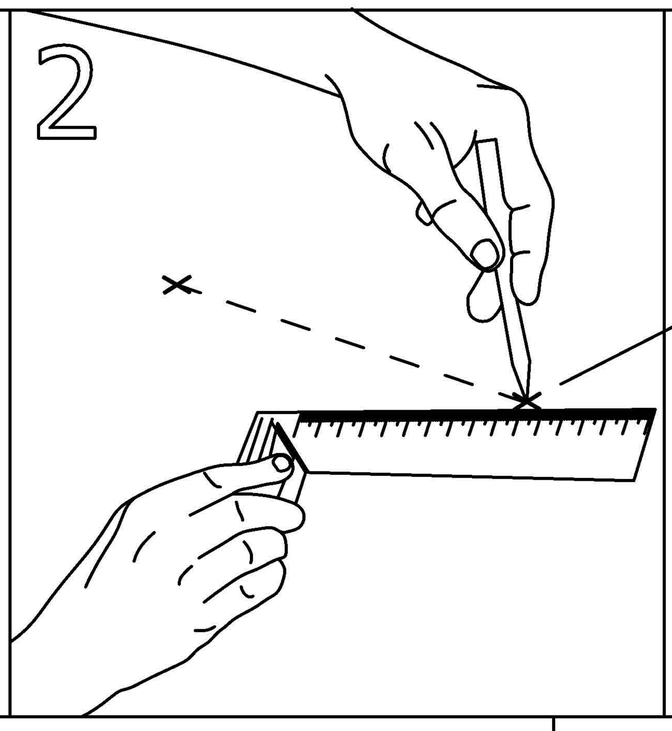
2

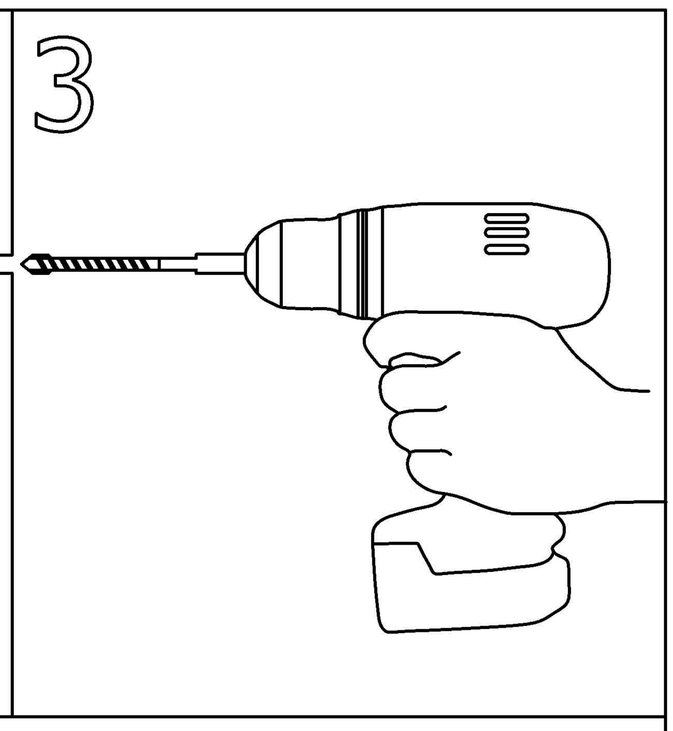
3

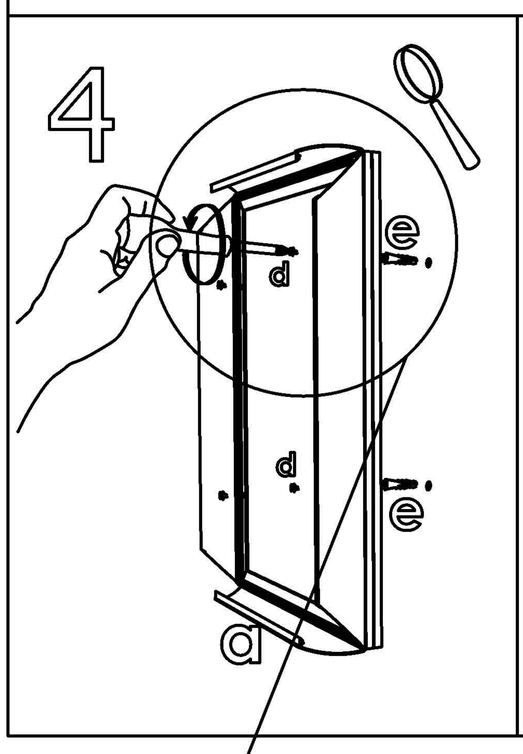
4
e
d
d
e
a

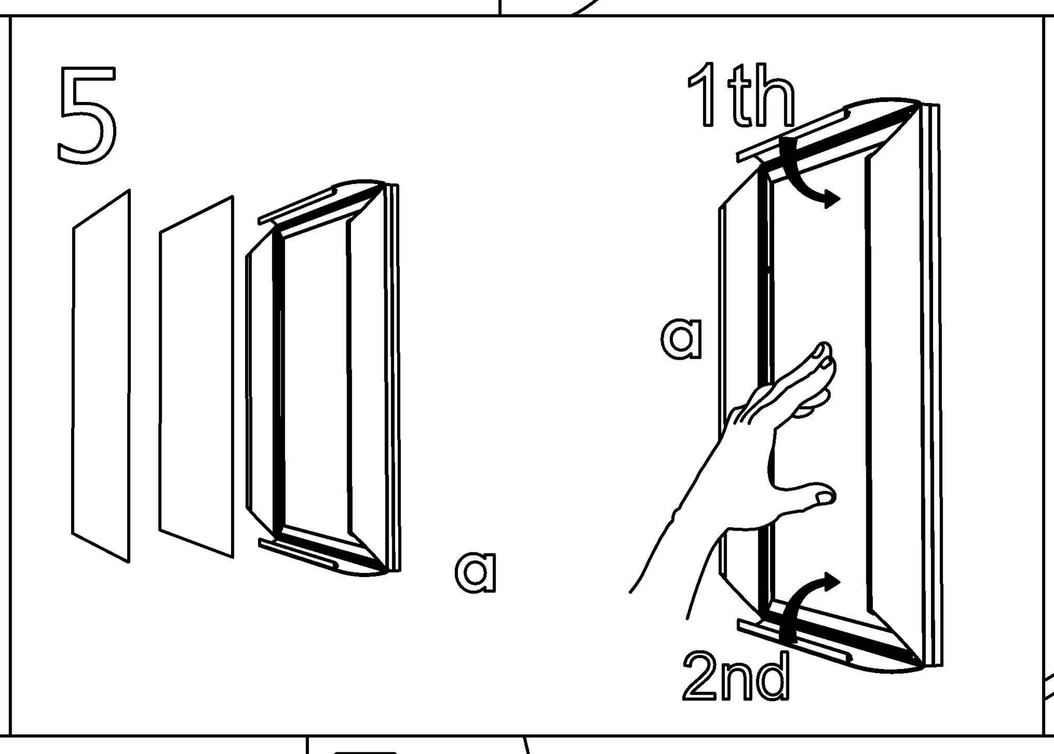
5
a
1th
a
2nd

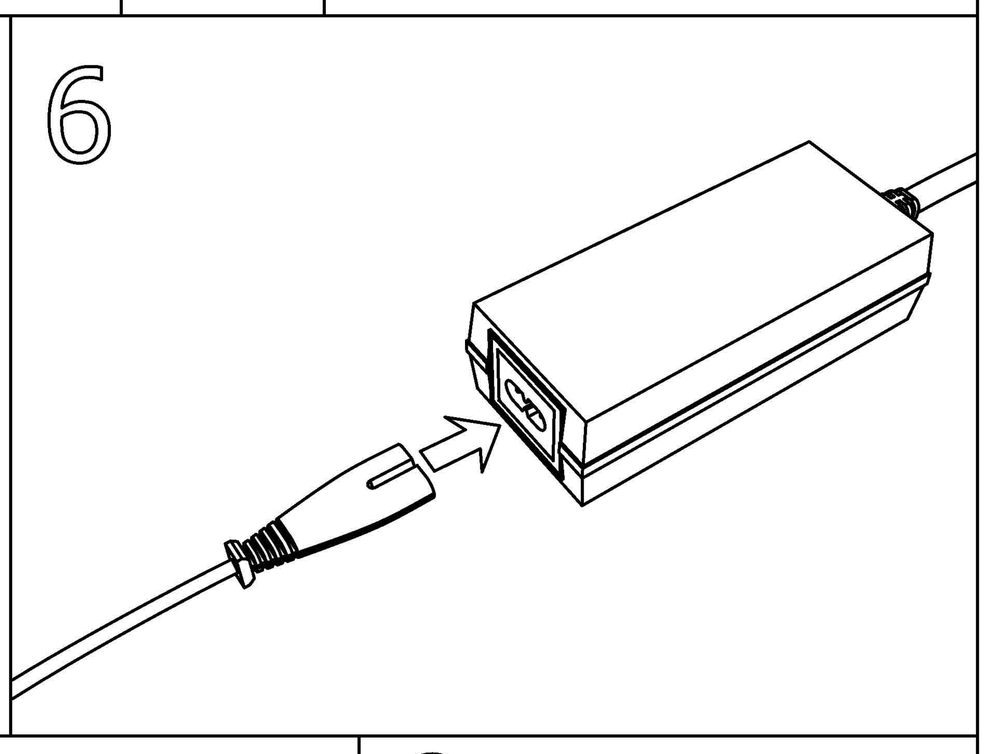
6

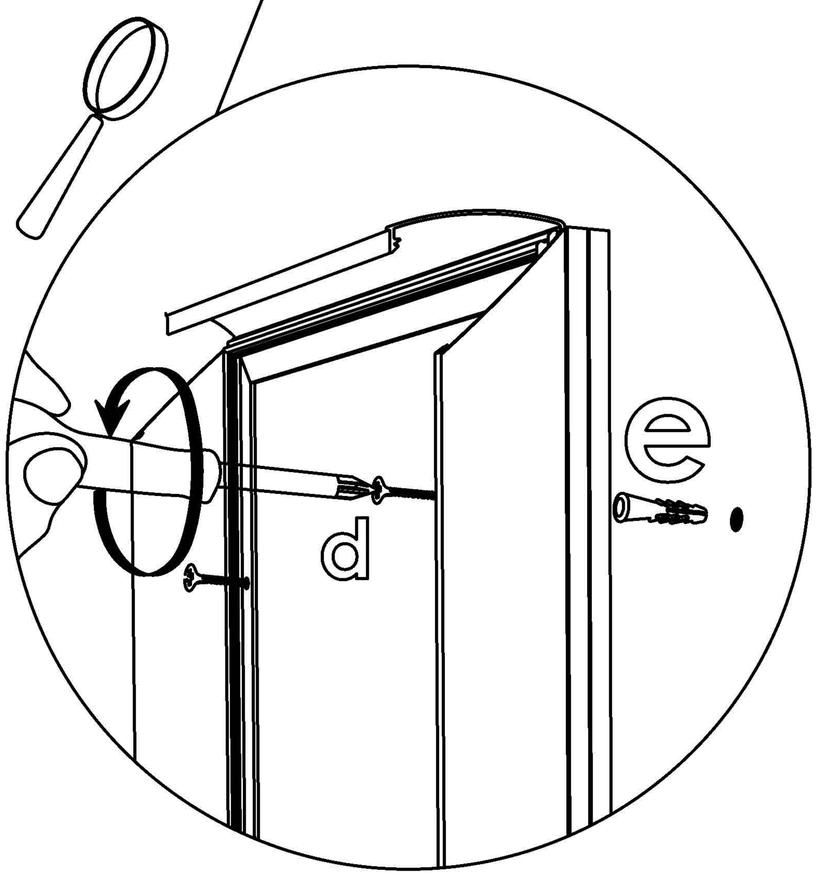
e
d

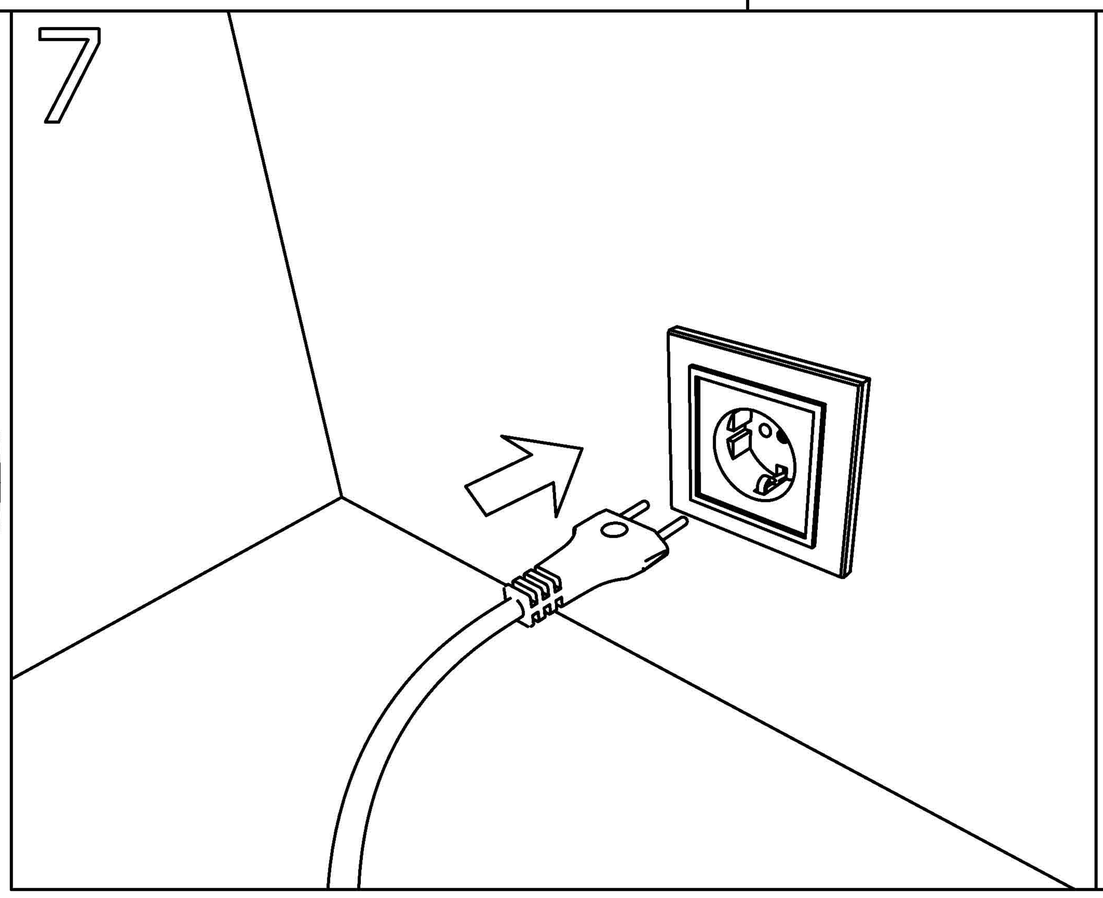
7

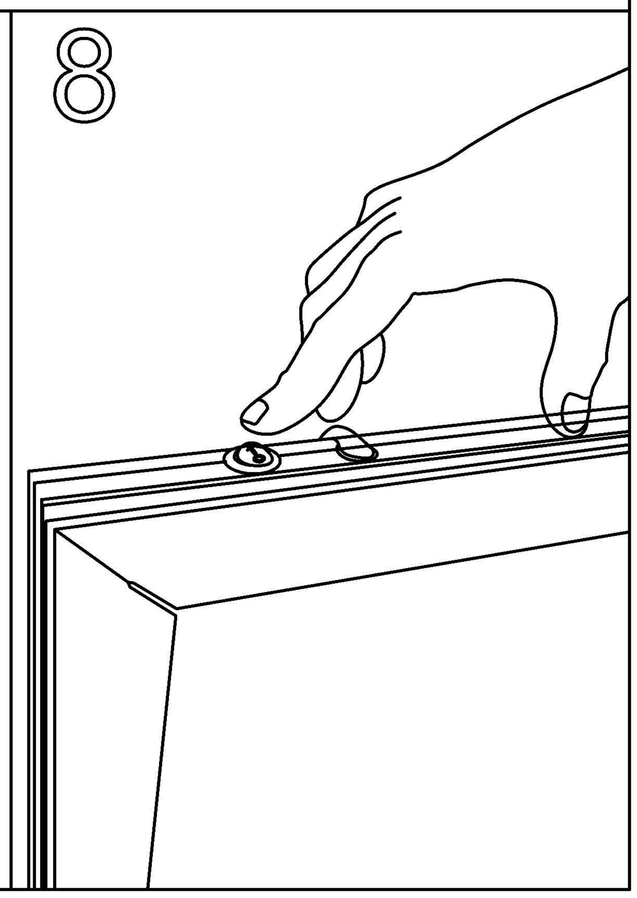
8